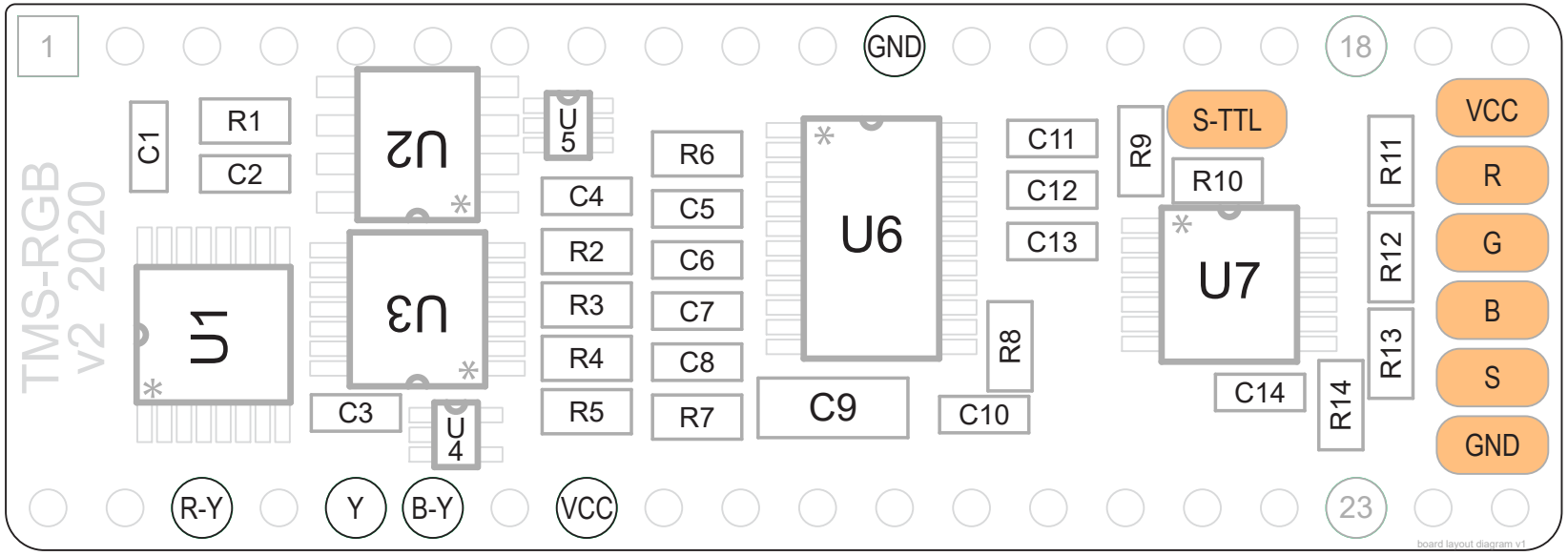
TMS-RGB
v2 2020
1
18
23
GND
VCC
R
G
B
S
GND
S-TTL
R-Y
Y
B-Y
VCC
U1
U2
U3
U4
U5
U6
U7
C1
C2
C3
C4
C5
C6
C7
C8
C9
C10
C11
C12
C13
C14
R1
R2
R3
R4
R5
R6
R7
R8
R9
R10
R11
R12
R13
R14
board layout diagram v1